GENERAL ARRANGEMENT ONLY

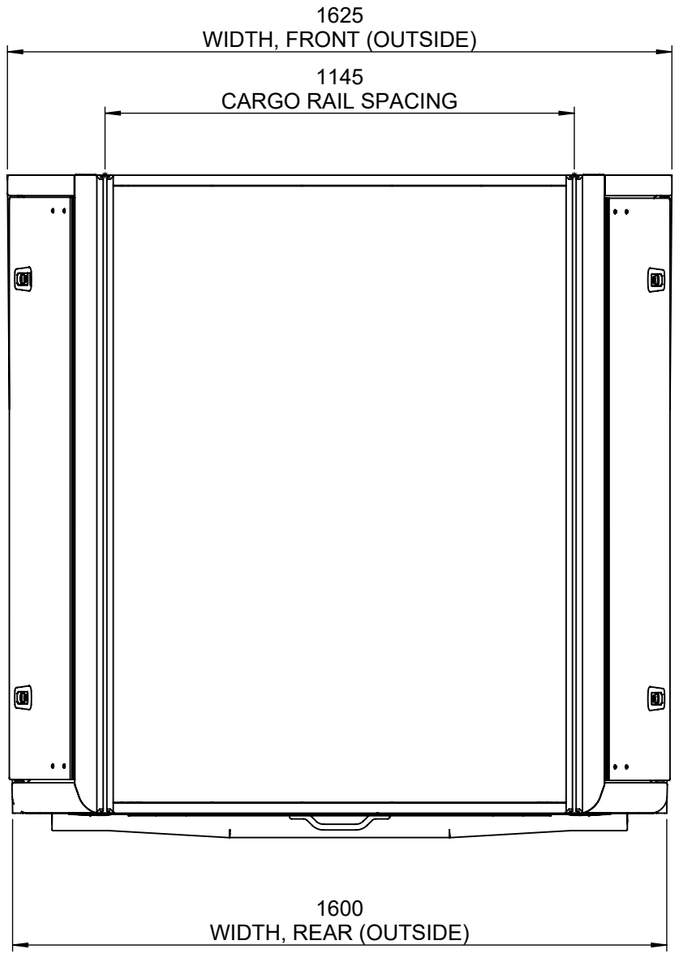

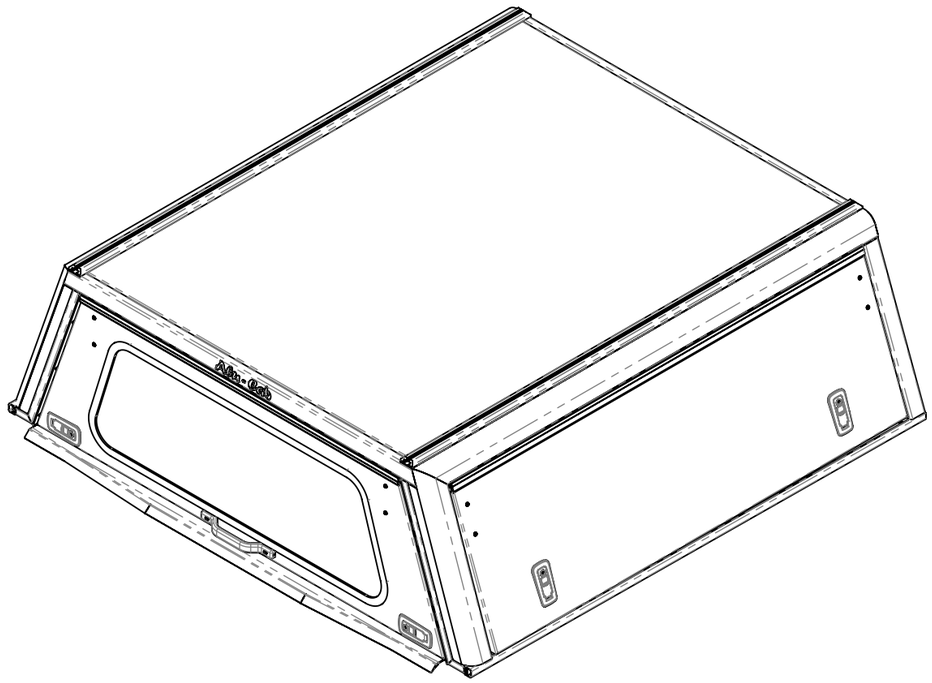

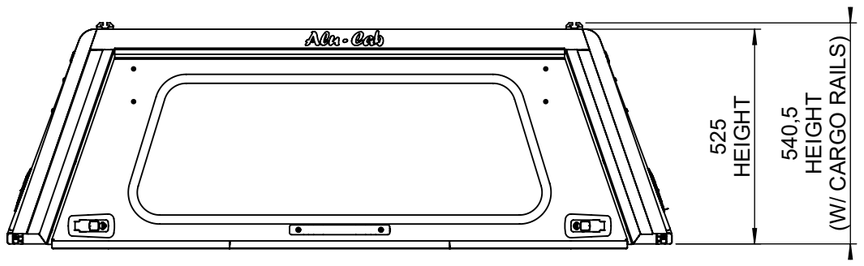

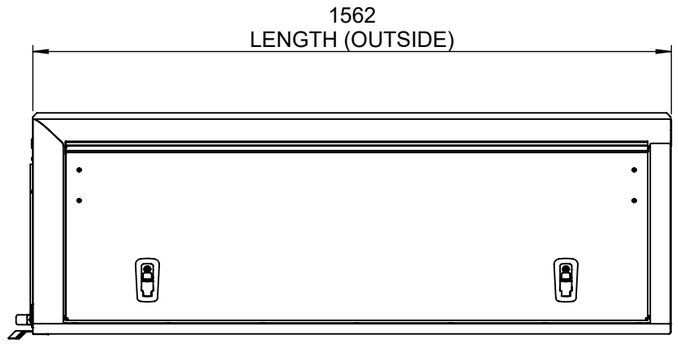

TOLERANCES TO ASSUME UNLESS INDICATED OTHERWISE			
NOM DIMENSION RANGE (mm)			TOLERANCE
0.50	-	3.00	± 0.10
3.00	-	6.00	± 0.15
6.00	-	30	± 0.20
30	-	120	± 0.30
120	-	400	± 0.50
400	-	1000	± 1.00
1000	-	1000<	± 2.00

DESCRIPTION: ISUZU D-MAX DC - GA

PROJECT: EXPLORER CANOPY

SHEET: A4

SCALE: 1:15

SHEET 1 of 1

Alu-Cab ULTIMATE OVERLAND PRODUCTS

DRAWN BY: B NEEDHAM

DATE: 05.03.20

THE INFORMATION CONTAINED WITHIN THIS DOCUMENT IS THE INTELLECTUAL PROPERTY OF ALU-CAB (PTY) LTD

DRAWING NO. EX CANOPY GA - ISUZU D-MAX DC

REV 00

REVISIONS

REV.	DESCRIPTION	ECO	DATE	APPROVED