GENERAL ARRANGEMENT

CHEVROLET COLORADO SB 2023
CONTOUR CANOPY

ASSY INFO		
	MASS (kg):	73.3
	BONDED:	Y
	FASTENED:	Y
	WELDED:	Y
FINISH	TUMBLED:	
	BRUSHED:	
	POWDER:	
	SPRAY:	
	COLOUR:	N/A

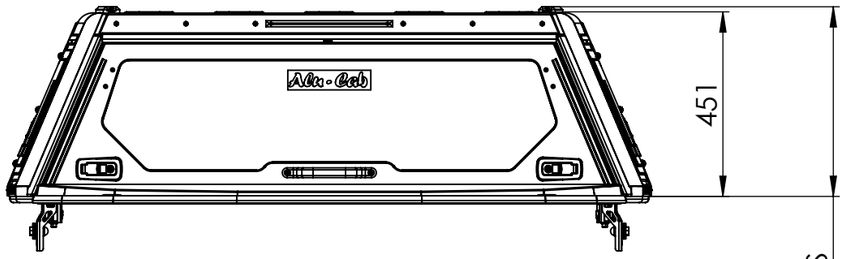

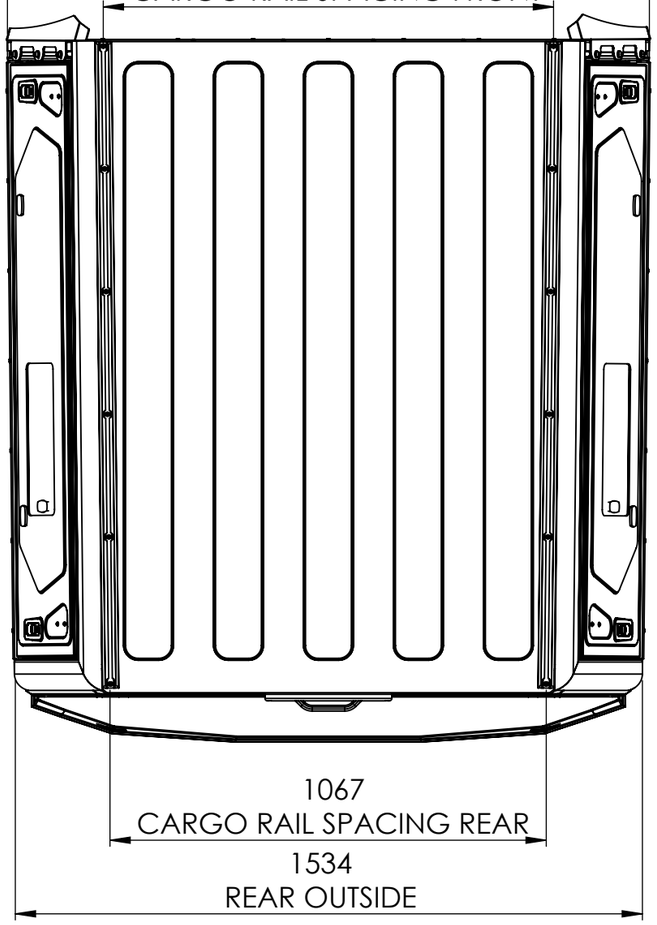

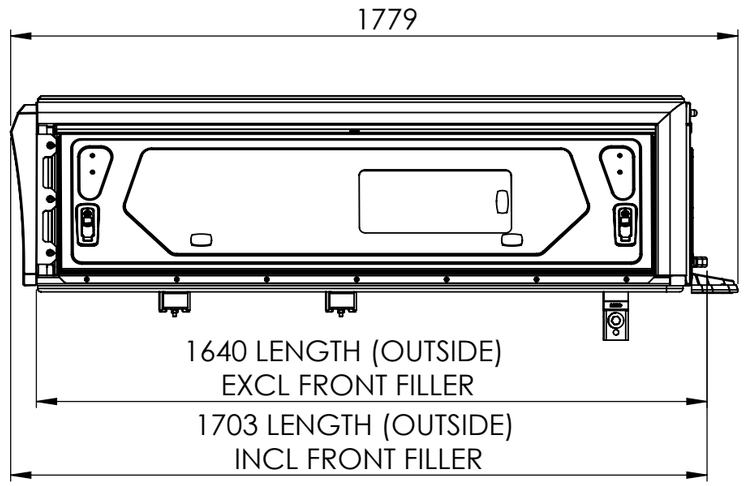

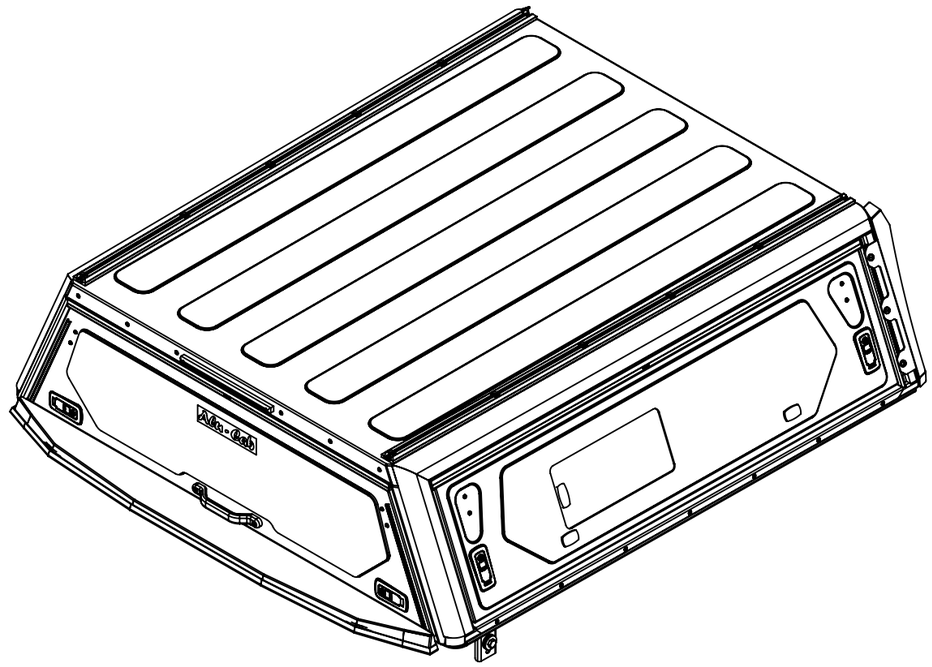

WEIGHT: 70kg
BOXED DIMENSIONS: 1740x1685x600 (mm)

TOLERANCES TO ASSUME UNLESS INDICATED OTHERWISE			
NOM DIMENSION RANGE (mm)			TOLERANCE
0.50	-	3.00	± 0.10
3.00	-	6.00	± 0.15
6.00	-	30	± 0.20
30	-	120	± 0.30
120	-	400	± 0.50
400	-	1000	± 1.00
1000	-	1000<	± 2.00

DESCRIPTION: CONTOUR CANOPY - COLORADO 2023 - SB-SIDE WINDOWS INCL

PROJECT: C2-SB-CH23

SHEET: A3

SCALE: 1:15

SHEET 1 of 1

Alu-Cab™ ULTIMATE OVERLAND PRODUCTS

DRAWN BY: System Administrator

DATE: 2024-10-31

THE INFORMATION CONTAINED WITHIN THIS DOCUMENT IS THE INTELLECTUAL PROPERTY OF ALU-CAB (PTY) LTD

DRAWING NO. C2-SB-CH23-GA

REV 03